IEM KOLKATA

MENSURATION
VOLUME & SURFACE AREA

Instructor: Akash Bhattacharya

Q1) Ajay has 2 cones with him. The 1st cone has radius twice that of the other and height half that of the other. What is the volume ratio of the 1st and 2nd cones?

Q2) Two cylinders have their radii in the ratio 4:7. If their heights are in the ratio of 21 : 8 then their volumes would be in what ratio?

Q3) The edges of a rectangular box are in the ratio of 3:5:8 and its surface area is 1422 cm^2. What will be the volume of the box?
(a) 4320 cm^3 (b) 3240 cm^3 (c) 3600 cm^3 (d) 2880 cm^3

Q4) The contents of a cylindrical container of radius 3cm & height 4cm are poured into a hemispherical cup of radius 6cm. Find the percentage of the volume of the hemispherical cup which is still not filled?
(a) 60% (b) 80% (c) 75% (d) 67%

Q5) Ramesh, a fabricator, has a metal sheet with dimensions 15 cm$\times$10 cm. Squares with side 2 cm are cut from each of the four corners. The sheet is then folded to form a planter with a depth 2 cm. What will be the volume of this planter?

Q6) A closed metal box has dimensions 20 cm$\times$15 cm$\times$10 cm. Thickness of the metal sheet is 1cm. How much liquid can this box store?

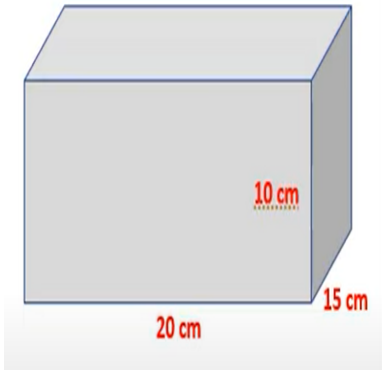

Q7) Ram has a cubical dice with total length of its space diagonals equal to 16cm. What is the total length of the edges of this dice?

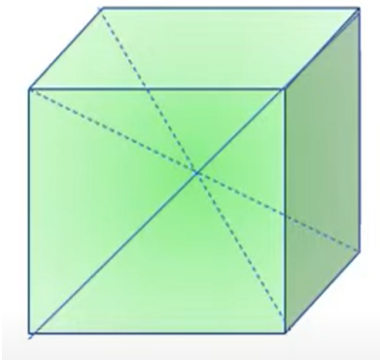

Q8) A solid metallic box with dimensions l, b and h respectively weighs 50 kg. What will be the change in the weight, if all the dimensions of the box are halved?

Q9) From a cube of side 10cm, a square hole of side 4cm is hollowed from end to end. What is the volume of the solid left?

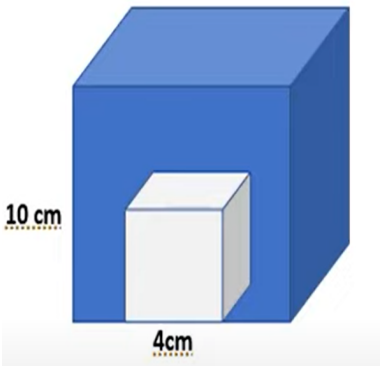

Q10) A solid spherical ball can displace 5 cubic meter of water. If 40 such balls are immersed in a tank at a time, what will be the rise in the level of water? Dimensions of the tank are 40m×20m×10m.

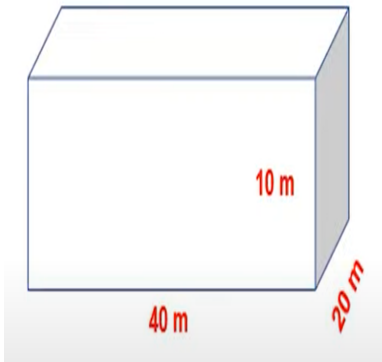

Q11) A well with inside diameter 10 m is dug 13 m deep. The soil taken out is spread all around it to form an embankment of width 3 m. What is the height of this embankment?

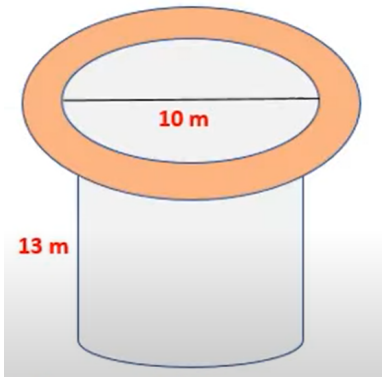

Q12) Tribals wish to set up a temporary tent. The base area of the tent would be 616 sq.m and height 14 m. The width of the canvas available in the market is $11\sqrt{2}$m. How much length of canvas is required?

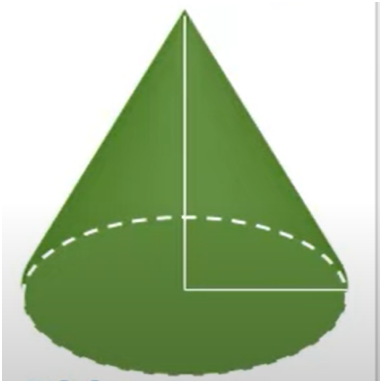

Q13) Three solid iron balls are melted to form a single solid iron ball. The radii of these balls are 6cm, 8cm and 10 cm. What will be the radius of the new ball formed?

Q14) In a cuboid, if length is increased by 20% & breadth is decreased by 10%, by how much percentage the height should be increased/decreased so that volume remains constant?

(a) 6.2% increase (b) 6.2% decrease (c) 7.4% increase (d) 7.4% decrease